Overview
Section 1. Differential Expression Analysis
Section 2. Pathway Analysis
Section 3. Gene Ontology (GO)
Section 4. Reactome Analysis
Section 5. GO online (OPTIONAL)
Session Information

Pathway Analysis from RNA-Seq Results

Code

Class 14

Barry Grant < http://thegrantlab.org/bimm143/ (http://thegrantlab.org/bimm143/) >
2026-02-19 (09:21:12 on Thu, Feb 19)

Overview

Analysis of high-throughput biological data typically yields a list of genes or proteins requiring further interpretation - for example the ranked lists of differentially expressed genes we have been generating from our RNA-seq analysis to date.

Our intention is typically to use such lists to gain novel insights about genes and proteins that may have roles in a given phenomenon, phenotype or disease progression. However, in many cases these 'raw' gene lists are challenging to interpret due to their large size and lack of useful annotations. Hence, our expensively assembled gene lists often fail to convey the full degree of possible insight about the condition being studied.

Pathway analysis (also known as gene set analysis or over-representation analysis), aims to reduce the complexity of interpreting gene lists via mapping the listed genes to known (i.e. annotated) biological pathways, processes and functions.

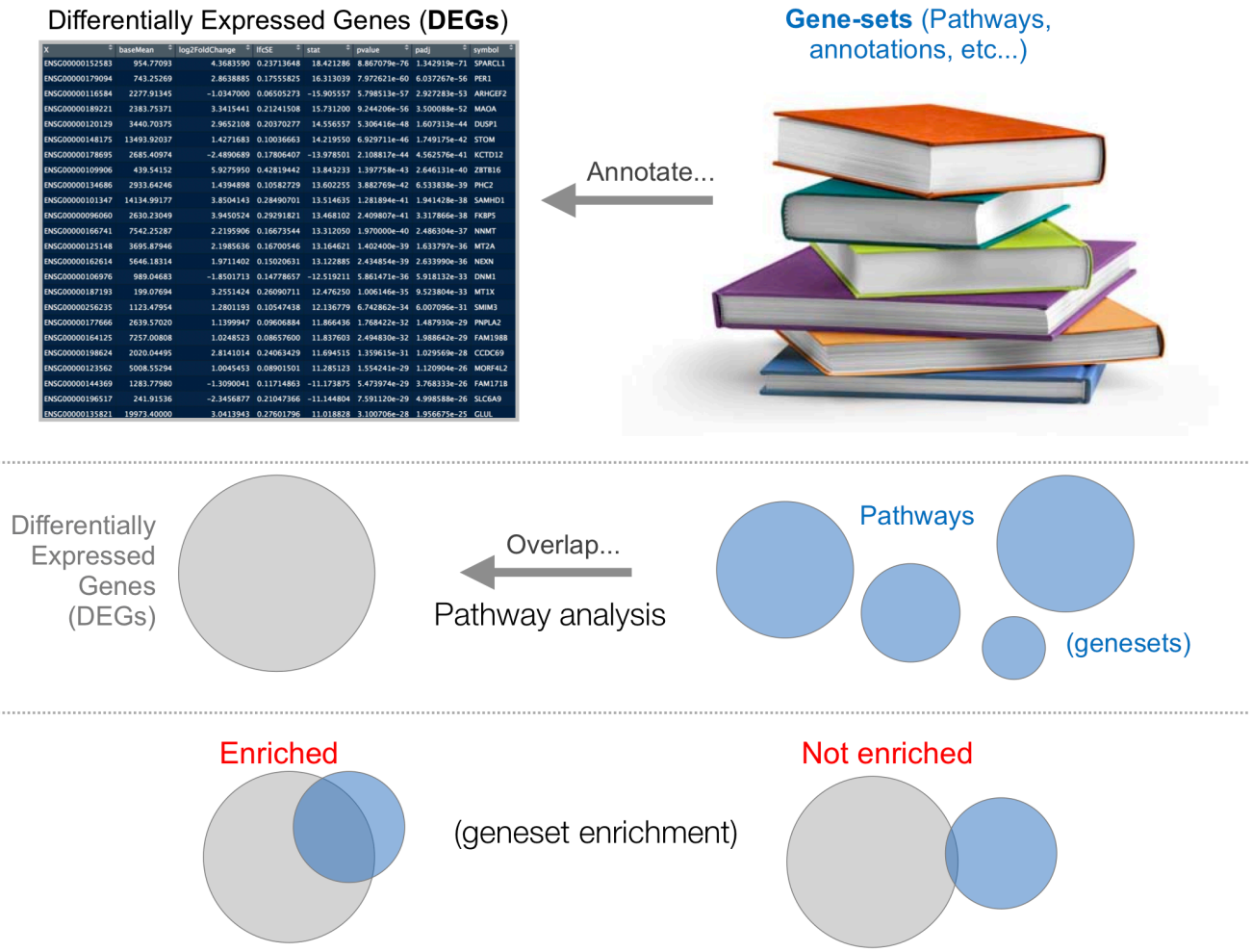

X	baseMean	log2FoldChange	lfcSE	stat	pvalue	padj	symbol
ENSG00000152583	954.77093	4.3683590	0.23713648	18.421286	8.867079e−76	1.342919e−71	SPARCL1
ENSG00000179094	743.25269	2.8638885	0.17555825	16.313039	7.972621e−60	6.037267e−56	PER1
ENSG00000116584	2277.91345	−1.0347000	0.06505273	−15.905557	5.798513e−57	2.927283e−53	ARHGEF2
ENSG00000189221	2383.75371	3.3415441	0.21241508	15.731200	9.244206e−56	3.500088e−52	MAOA
ENSG00000120129	3440.70375	2.9652108	0.20370277	14.556557	5.306416e−48	1.607313e−44	DUSP1
ENSG00000148175	13493.92037	1.4271683	0.10036663	14.219550	6.929711e−46	1.749175e−42	STOM
ENSG00000178695	2685.40974	−2.4890689	0.17806407	−13.978501	2.108817e−44	4.562576e−41	KCTD12
ENSG00000109906	439.54152	5.9275950	0.42819442	13.843233	1.397758e−43	2.646131e−40	ZBTB16
ENSG00000134686	2933.64246	1.4394898	0.10582729	13.602255	3.882769e−42	6.533838e−39	PHC2
ENSG00000101347	14134.99177	3.8504143	0.28490701	13.514635	1.281894e−41	1.941428e−38	SAMHD1
ENSG00000096060	2630.23049	3.9450524	0.29291821	13.468102	2.409807e−41	3.317866e−38	FKBP5
ENSG00000166741	7542.25287	2.2195906	0.16673544	13.312050	1.970000e−40	2.486304e−37	NNMT
ENSG00000125148	3695.87946	2.1985636	0.16700546	13.164621	1.402400e−39	1.633797e−36	MT2A
ENSG00000162614	5646.18314	1.9711402	0.15020631	13.122885	2.434854e−39	2.633990e−36	NEXN
ENSG00000106976	989.04683	−1.8501713	0.14778657	−12.519211	5.861471e−36	5.918132e−33	DNM1
ENSG00000187193	199.07694	3.2551424	0.26090711	12.476250	1.006146e−35	9.523804e−33	MT1X
ENSG00000256235	1123.47954	1.2801193	0.10547438	12.136779	6.742862e−34	6.007096e−31	SMIM3
ENSG00000177666	2639.57020	1.1399947	0.09606884	11.866436	1.768422e−32	1.487930e−29	PNPLA2
ENSG00000164125	7257.00808	1.0248523	0.08657600	11.837603	2.494830e−32	1.988642e−29	FAM198B
ENSG00000198624	2020.04495	2.8141014	0.24063429	11.694515	1.359615e−31	1.029569e−28	CCDC69
ENSG00000123562	5008.55294	1.0045453	0.08901501	11.285123	1.554241e−29	1.120904e−26	MORF4L2
ENSG00000144369	1283.77980	−1.3090041	0.11714863	−11.173875	5.473974e−29	3.768333e−26	FAM171B
ENSG00000196517	241.91536	−2.3456877	0.21047366	−11.144804	7.591120e−29	4.998588e−26	SLC6A9
ENSG00000135821	19973.40000	3.0413943	0.27601796	11.018828	3.100706e−28	1.956675e−25	GLUL

Side-note: Pathway analysis can actually mean many different things to different people. This includes analysis of Gene Ontology (GO) terms, protein–protein interaction networks, flux-balance analysis from kinetic simulations of pathways, etc. However, pathway analysis most commonly focuses on methods that exploit existing pathway knowledge (e.g. in public repositories such as GO or KEGG), rather than on methods that infer pathways from molecular measurements. These more general approaches are nicely reviewed in this paper:

- Khatri, et al. "*Ten years of pathway analysis: current approaches and outstanding challenges*." PLoS Comput Biol 8.2 (2012): e1002375 (http://journals.plos.org/ploscompbiol/article?id=10.1371/journal.pcbi.1002375).

Pathway analysis with R and Bioconductor

There are many freely available tools for pathway or over-representation analysis. As of Nov 2017 Bioconductor alone has over 80 packages categorized under gene set enrichment (http://bioconductor.org/packages/release/BiocViews.html#___GeneSetEnrichment) and over 120 packages categorized under pathways (http://bioconductor.org/packages/release/BiocViews.html#___Pathways).

Here we play with just one, the **GAGE** package (https://bioconductor.org/packages/release/bioc/html/gage.html) (which stands for **G**enerally **A**pplicable **G**ene set **E**nrichment), to do KEGG pathway enrichment analysis on RNA-seq based differential expression results.

The KEGG pathway database (http://www.genome.jp/kegg/pathway.html), unlike GO for example, provides functional annotation as well as information about gene products that interact with each other in a given pathway, how they interact (e.g., activation, inhibition, etc.), and where they interact (e.g., cytoplasm, nucleus, etc.). Hence KEGG has the potential to provide extra insight beyond annotation lists of simple molecular function, process etc. from GO terms.

In this analysis, we check for coordinated differential expression over gene sets from KEGG pathways instead of changes of individual genes. The assumption here is that consistent perturbations over a given pathway (gene set) may suggest mechanistic changes.

About our Input Data

The data for our hands-on session comes from GEO entry: GSE37704 (http://www.ncbi.nlm.nih.gov/geo/query/acc.cgi?acc=GSE37704), which is associated with the following publication:

- Trapnell C, Hendrickson DG, Sauvageau M, Goff L et al. "*Differential analysis of gene regulation at transcript resolution with RNA-seq*". Nat Biotechnol 2013 Jan;31(1):46-53. PMID: 23222703 (https://www.ncbi.nlm.nih.gov/pubmed/23222703)

The authors report on differential analysis of lung fibroblasts in response to loss of the developmental transcription factor HOXA1. Their results and others indicate that HOXA1 is required for lung fibroblast and HeLa cell cycle progression. In particular their analysis show that "loss of HOXA1 results in significant expression level changes in thousands of individual transcripts, along with isoform switching events in key regulators of the cell cycle". For our session we have used their Sailfish (https://www.nature.com/articles/nbt.2862) gene-level estimated counts and hence are restricted to protein-coding genes only.

Section 1. Differential Expression Analysis

You can download the count data and associated metadata from here: GSE37704_featurecounts.csv (https://bioboot.github.io/bimm143_W18/class-material/GSE37704_featurecounts.csv) and GSE37704_metadata.csv (https://bioboot.github.io/bimm143_W18/class-material/GSE37704_metadata.csv). This is similar to our starting point for the last class where we used DESeq2 for the first time. We will use it again today!

Hide

```
library(DESeq2)
```

Load our data files

Hide

```
metaFile <- "data/GSE37704_metadata.csv"
countFile <- "data/GSE37704_featurecounts.csv"

# Import metadata and take a peek
colData = read.csv(metaFile, row.names=1)
head(colData)
```

Hide

```
# Import countdata
countData = read.csv(countFile, row.names=1)
head(countData)
```

Hmm... remember that we need the `countData` and `colData` files to match up so we will need to remove that odd first column in `countData` namely `countData$length` .

Q. Complete the code below to remove the troublesome first column from `countData`

Hide

```
# Note we need to remove the odd first $length col
countData <- as.matrix(countData[,___])
head(countData)
```

```
##                 SRR493366 SRR493367 SRR493368 SRR493369 SRR4933
70 SRR493371
## ENSG00000186092         0         0         0         0
0         0
## ENSG00000279928         0         0         0         0
0         0
## ENSG00000279457        23        28        29        29
28        46
## ENSG00000278566         0         0         0         0
0         0
## ENSG00000273547         0         0         0         0
0         0
## ENSG00000187634       124       123       205       207       2
12       258
```

This looks better but there are lots of zero entries in there so let's get rid of them as we have no data for these.

Q. Complete the code below to filter `countData` to exclude genes (i.e. rows) where we have 0 read count across all samples (i.e. columns).

Tip: What will **rowSums()** of `countData` return and how could you use it in this context?

Hide

```
# Filter count data where you have 0 read count across all sample
        s.
countData = countData[___, ]
head(countData)
```

```
##                 SRR493366 SRR493367 SRR493368 SRR493369 SRR4933
70 SRR493371
## ENSG00000279457        23        28        29        29
28        46
## ENSG00000187634       124       123       205       207       2
12       258
## ENSG00000188976      1637      1831      2383      1226      13
26      1504
## ENSG00000187961       120       153       180       236       2
55       357
## ENSG00000187583        24        48        65        44
48        64
## ENSG00000187642         4         9        16        14
16        16
```

Running DESeq2

Nice now lets setup the DESeqDataSet object required for the **DESeq()** function and then run the DESeq pipeline. This is again similar to our last day's hands-on session.

Hide

```
dds = DESeqDataSetFromMatrix(countData=___,
                             colData=___,
                             design=~___)
dds = DESeq(___)
dds
```

```
## estimating size factors
```

```
## estimating dispersions
```

```
## gene-wise dispersion estimates
```

```
## mean-dispersion relationship
```

```
## final dispersion estimates
```

```
## fitting model and testing
```

```
## class: DESeqDataSet
## dim: 15280 6
## metadata(1): version
## assays(4): counts mu H cooks
## rownames(15280): ENSG00000279457 ENSG00000187634 ... ENSG00000276345
##   ENSG00000271254
## rowData names(22): baseMean baseVar ... deviance maxCooks
## colnames(6): SRR493366 SRR493367 ... SRR493370 SRR493371
## colData names(2): condition sizeFactor
```

Next, get results for the HoxA1 knockdown versus control siRNA (remember that these were labeled as "**hoxa1_kd**" and "**control_sirna**" in our original `colData` metaFile input to DESeq, you can check this above and by running `resultsNames(dds)` command).

Hide

```
res = results(dds)
```

Q. Call the **summary()** function on your results to get a sense of how many genes are up or down-regulated at the default 0.1 p-value cutoff.

Hide

```
summary(___)
```

```
##
## out of 15280 with nonzero total read count
## adjusted p-value < 0.1
## LFC > 0 (up)       : 4351, 28%
## LFC < 0 (down)     : 4399, 29%
## outliers [1]       : 0, 0%
## low counts [2]     : 590, 3.9%
## (mean count < 1)
## [1] see 'cooksCutoff' argument of ?results
## [2] see 'independentFiltering' argument of ?results
```

Volcano Plot

Now we will make a volcano plot, a commonly produced visualization from this type of data that we introduced last day. Basically it's a plot of log2 fold change vs -log adjusted p-value.

Hide

```
library(___)

ggplot(res) +
  aes(___,
      ___) +
  geom_point()
```

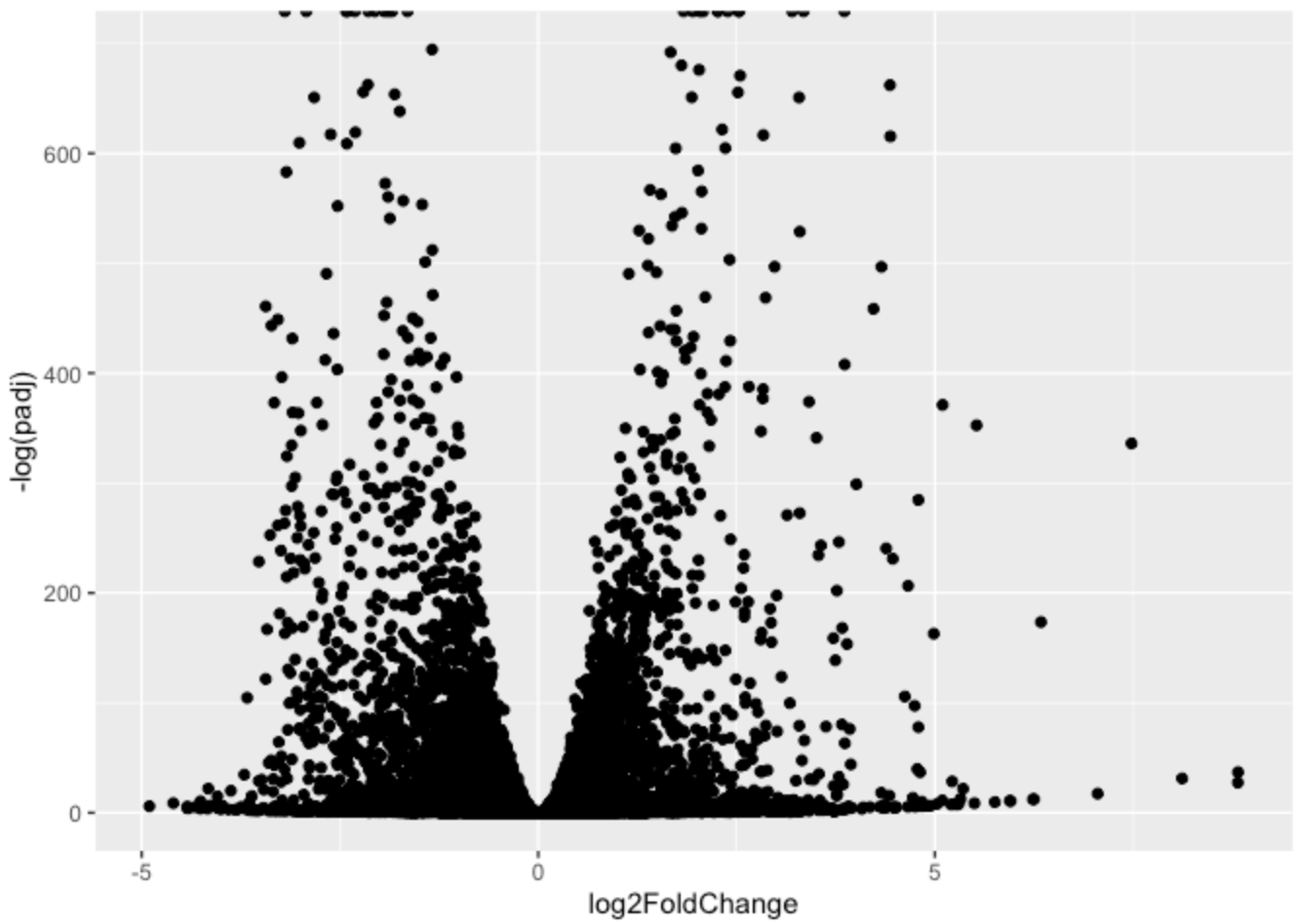

Q. Improve this plot by completing the below code, which adds color, axis labels and cutoff lines:

Hide

```
# Make a color vector for all genes
mycols <- rep("gray", ___ )

# Color blue the genes with fold change above 2
mycols[ abs(___) > 2 ] <- "blue"

# Color gray those with adjusted p-value more than 0.01
mycols[ res$padj > 0.01 ] <- "gray"

ggplot(res) +
  aes(___,
      ___ +
  geom_point(___) +
  xlab("Log2(FoldChange)") +
  ylab("-Log(P-value)") +
  geom_vline(___ = c(-2,2)) +
  geom_hline(yintercept = ___)
```

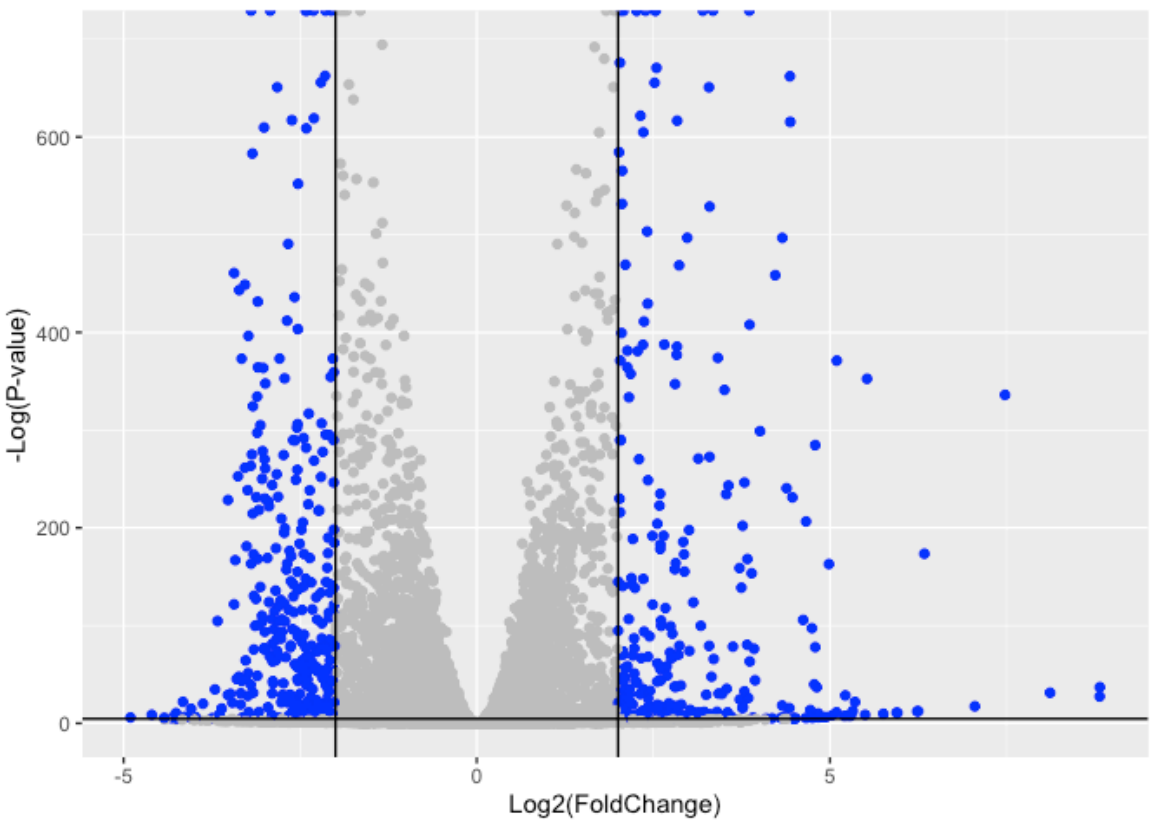

Adding gene annotation

Since we mapped and counted against the Ensembl annotation, our results only have information about Ensembl gene IDs. However, our pathway analysis downstream will use KEGG pathways, and genes in KEGG pathways are annotated with Entrez gene IDs. So lets add them as we did the last day.

Q. Use the **mapIDs()** function multiple times to add SYMBOL, ENTREZID and GENENAME annotation to our results by completing the code below.

Hide

```
library("AnnotationDbi")
library("org.Hs.eg.db")

columns(org.Hs.eg.db)

res$symbol = mapIds(org.Hs.eg.db,
                    keys=___,
                    keytype="ENSEMBL",
                    column=___,
                    multiVals="first")

res$entrez = mapIds(org.Hs.eg.db,
                    keys=___,
                    keytype="ENSEMBL",
                    column="ENTREZID",
                    multiVals="first")

res$name =   mapIds(org.Hs.eg.db,
                    keys=row.names(res),
                    keytype=___,
                    column=___,
                    multiVals="first")

head(res, 10)
```

```
## log2 fold change (MLE): condition hoxa1 kd vs control sirna
## Wald test p-value: condition hoxa1 kd vs control sirna
## DataFrame with 10 rows and 9 columns
##                  baseMean log2FoldChange     lfcSE       stat
pvalue
##                 <numeric>      <numeric> <numeric>  <numeric>
<numeric>
## ENSG00000279457   29.9136      0.1792571 0.3248216   0.551863
5.81042e-01
## ENSG00000187634  183.2296      0.4264571 0.1402658   3.040350
2.36304e-03
## ENSG00000188976 1651.1881     -0.6927205 0.0548465 -12.630158
1.43989e-36
## ENSG00000187961  209.6379      0.7297556 0.1318599   5.534326
3.12428e-08
## ENSG00000187583   47.2551      0.0405765 0.2718928   0.149237
8.81366e-01
## ENSG00000187642   11.9798      0.5428105 0.5215599   1.040744
2.97994e-01
## ENSG00000188290  108.9221      2.0570638 0.1969053  10.446970
1.51282e-25
## ENSG00000187608  350.7169      0.2573837 0.1027266   2.505522
1.22271e-02
## ENSG00000188157 9128.4394      0.3899088 0.0467163   8.346304
7.04321e-17
## ENSG00000131591  156.4791      0.1965923 0.1456109   1.350121
1.76977e-01
##                       padj      symbol      entrez
name
##                  <numeric> <character> <character>
<character>
## ENSG00000279457 6.85033e-01          NA          NA
NA
## ENSG00000187634 5.14039e-03      SAMD11      148398 sterile alp
ha motif ..
## ENSG00000188976 1.75974e-35       NOC2L       26155 NOC2 like n
ucleolar ..
## ENSG00000187961 1.13044e-07      KLHL17      339451 kelch like
family me..
## ENSG00000187583 9.19159e-01     PLEKHN1       84069 pleckstrin
homology ..
## ENSG00000187642 4.02066e-01       PERM1       84808 PPARGC1 and
ESRR ind..
## ENSG00000188290 1.30113e-24        HES4       57801 hes family
bHLH tran..
## ENSG00000187608 2.36679e-02       ISG15        9636 ISG15 ubiqu
itin like..
## ENSG00000188157 4.20588e-16        AGRN      375790
```

```
agrin
## ENSG00000131591 2.60893e-01    C1orf159       54991 chromosome
1 open re..
```

Q. Finally for this section let's reorder these results by adjusted p-value and save them to a CSV file in your current project directory.

Hide

```
res = res[order(res$pvalue),]
write.csv(___, ___="deseq_results.csv")
```

Great, this is looking good so far. Now lets see how pathway analysis can help us make further sense out of this ranked list of differentially expressed genes.

Section 2. Pathway Analysis

Here we are going to use the **gage** (https://bioconductor.org/packages/release/bioc/html/gage.html) package for pathway analysis. Once we have a list of enriched pathways, we're going to use the **pathview** (http://bioconductor.org/packages/release/bioc/html/pathview.html) package to draw pathway diagrams, shading the molecules in the pathway by their degree of up/down-regulation.

KEGG pathways

The **gageData** package has pre-compiled databases mapping genes to KEGG pathways and GO terms for common organisms. `kegg.sets.hs` is a named list of 229 elements. Each element is a character vector of member gene Entrez IDs for a single KEGG pathway. (See also `go.sets.hs`). The `sigmet.idx.hs` is an index of numbers of signaling and metabolic pathways in `kegg.set.gs`. In other words, KEGG pathway include other types of pathway definitions, like "Global Map" and "Human Diseases", which may be undesirable in a particular pathway analysis. Therefore, `kegg.sets.hs[sigmet.idx.hs]` gives you the "cleaner" gene sets of signaling and metabolic pathways only.

> **Side-Note**: While there are many freely available tools to do pathway analysis, and some like gage are truly fantastic, many of them are poorly maintained or rarely updated. The DAVID tool that a lot of folks use for simple gene set enrichment analysis was not updated at all between Jan 2010 and Oct 2016.

First we need to do our one time install of these required bioconductor packages:

Hide

```
# Run in your R console (i.e. not your Rmarkdown doc!)
BiocManager::install( c("pathview", "gage", "gageData") )

# For old versions of R only (R < 3.5.0)!
#source("http://bioconductor.org/biocLite.R")
#biocLite( c("pathview", "gage", "gageData") )
```

Now we can load the packages and setup the KEGG data-sets we need.

Hide

```
library(pathview)
library(gage)
library(gageData)

data(kegg.sets.hs)
data(sigmet.idx.hs)

# Focus on signaling and metabolic pathways only
kegg.sets.hs = kegg.sets.hs[sigmet.idx.hs]

# Examine the first 3 pathways
head(kegg.sets.hs, 3)
```

```
## $`hsa00232 Caffeine metabolism`
## [1] "10"   "1544" "1548" "1549" "1553" "7498" "9"
##
## $`hsa00983 Drug metabolism - other enzymes`
##  [1] "10"     "1066"   "10720"  "10941"  "151531" "1548"   "1549"   "1551"
##  [9] "1553"   "1576"   "1577"   "1806"   "1807"   "1890"   "221223" "2990"
## [17] "3251"   "3614"   "3615"   "3704"   "51733"  "54490"  "54575"  "5457
6"
## [25] "54577"  "54578"  "54579"  "54600"  "54657"  "54658"  "54659"  "5496
3"
## [33] "574537" "64816"  "7083"   "7084"   "7172"   "7363"   "7364"   "7365"
## [41] "7366"   "7367"   "7371"   "7372"   "7378"   "7498"   "79799"  "8354
9"
## [49] "8824"   "8833"   "9"      "978"
##
## $`hsa00230 Purine metabolism`
##   [1] "100"    "10201"  "10606"  "10621"  "10622"  "10623"  "107"    "1071
4"
##   [9] "108"    "10846"  "109"    "111"    "11128"  "11164"  "112"    "113"
##  [17] "114"    "115"    "122481" "122622" "124583" "132"    "158"    "159"
##  [25] "1633"   "171568" "1716"   "196883" "203"    "204"    "205"    "2218
23"
##  [33] "2272"   "22978"  "23649"  "246721" "25885"  "2618"   "26289"  "270"
##  [41] "271"    "27115"  "272"    "2766"   "2977"   "2982"   "2983"   "298
4"
##  [49] "2986"   "2987"   "29922"  "3000"   "30833"  "30834"  "318"    "325
1"
##  [57] "353"    "3614"   "3615"   "3704"   "377841" "471"    "4830"   "483
1"
##  [65] "4832"   "4833"   "4860"   "4881"   "4882"   "4907"   "50484"  "5094
0"
##  [73] "51082"  "51251"  "51292"  "5136"   "5137"   "5138"   "5139"   "514
0"
##  [81] "5141"   "5142"   "5143"   "5144"   "5145"   "5146"   "5147"   "514
8"
##  [89] "5149"   "5150"   "5151"   "5152"   "5153"   "5158"   "5167"   "516
9"
##  [97] "51728"  "5198"   "5236"   "5313"   "5315"   "53343"  "54107"  "542
2"
## [105] "5424"   "5425"   "5426"   "5427"   "5430"   "5431"   "5432"   "543
3"
## [113] "5434"   "5435"   "5436"   "5437"   "5438"   "5439"   "5440"   "544
1"
## [121] "5471"   "548644" "55276"  "5557"   "5558"   "55703"  "55811"  "5582
1"
## [129] "5631"   "5634"   "56655"  "56953"  "56985"  "57804"  "58497"  "624
0"
## [137] "6241"   "64425"  "646625" "654364" "661"    "7498"   "8382"   "8417
```

```
2"
## [145] "84265"  "84284"  "84618"  "8622"   "8654"   "87178"  "8833"   "906
0"
## [153] "9061"   "93034"  "953"    "9533"   "954"    "955"    "956"    "957"
## [161] "9583"   "9615"
```

The main **gage()** function requires a named vector of fold changes, where the names of the values are the Entrez gene IDs.

Note that we used the **mapIDs()** function above to obtain Entrez gene IDs (stored in `res$entrez`) and we have the fold change results from DESeq2 analysis (stored in `res$log2FoldChange`).

Hide

```
foldchanges = res$log2FoldChange
names(foldchanges) = res$entrez
head(foldchanges)
```

```
##      1266     54855      1465     51232      2034      2317
## -2.422719  3.201955 -2.313738 -2.059631 -1.888019 -1.649792
```

Now, let's run the **gage** pathway analysis.

Hide

```
# Get the results
keggres = gage(foldchanges, gsets=kegg.sets.hs)
```

See help on the gage function with `?gage` . Specifically, you might want to try changing the value of `same.dir` . This value determines whether to test for changes in a gene set toward a single direction (all genes up or down regulated) or changes towards both directions simultaneously (i.e. any genes in the pathway dysregulated). Here, we're using the default `same.dir=TRUE` , which will give us separate lists for pathways that are upregulated versus pathways that are down-regulated.

Now lets look at the object returned from **gage()**.

Hide

```
attributes(keggres)
```

```
## $names
## [1] "greater" "less"    "stats"
```

It is a list with three elements, "greater", "less" and "stats".

You can also see this in your *Environment* panel/tab window of RStudio or use the R command `str(keggres)`.

Like any list we can use the dollar syntax to access a named element, e.g. `head(keggres$greater)` and `head(keggres$less)`.

Lets look at the first few down (less) pathway results:

Hide

```
# Look at the first few down (less) pathways
head(keggres$less)
```

```
##                                        p.geomean stat.mean       p.val
## hsa04110 Cell cycle                   1.003993e-05 -4.353454 1.003993e-05
## hsa03030 DNA replication              8.909558e-05 -3.968611 8.909558e-05
## hsa03013 RNA transport                1.470985e-03 -3.007794 1.470985e-03
## hsa04114 Oocyte meiosis               1.946905e-03 -2.921710 1.946905e-03
## hsa03440 Homologous recombination     2.941989e-03 -2.868141 2.941989e-03
## hsa00010 Glycolysis / Gluconeogenesis 6.059196e-03 -2.558327 6.059196e-03
##                                            q.val set.size         exp1
## hsa04110 Cell cycle                   0.001606390      120 1.003993e-05
## hsa03030 DNA replication              0.007127646       36 8.909558e-05
## hsa03013 RNA transport                0.077876201      143 1.470985e-03
## hsa04114 Oocyte meiosis               0.077876201       99 1.946905e-03
## hsa03440 Homologous recombination     0.094143663       28 2.941989e-03
## hsa00010 Glycolysis / Gluconeogenesis 0.161578551       48 6.059196e-03
```

Each `keggres$less` and `keggres$greater` object is data matrix with gene sets as rows sorted by p-value.

The top "less/down" pathways is "Cell cycle" with the KEGG pathway identifier `hsa04110`.

Now, let's try out the **pathview()** function from the pathview package (https://bioconductor.org/packages/release/bioc/html/pathview.html) to make a pathway plot with our RNA-Seq expression results shown in color.
To begin with lets manually supply a `pathway.id` (namely the first part of the `"hsa04110 Cell cycle"`) that we could see from the print out above.

Hide

```
pathview(gene.data=foldchanges, pathway.id="hsa04110")
```

This downloads the pathway figure data from KEGG and adds our results to it. Here is the default low resolution raster PNG output from the pathview() call above:

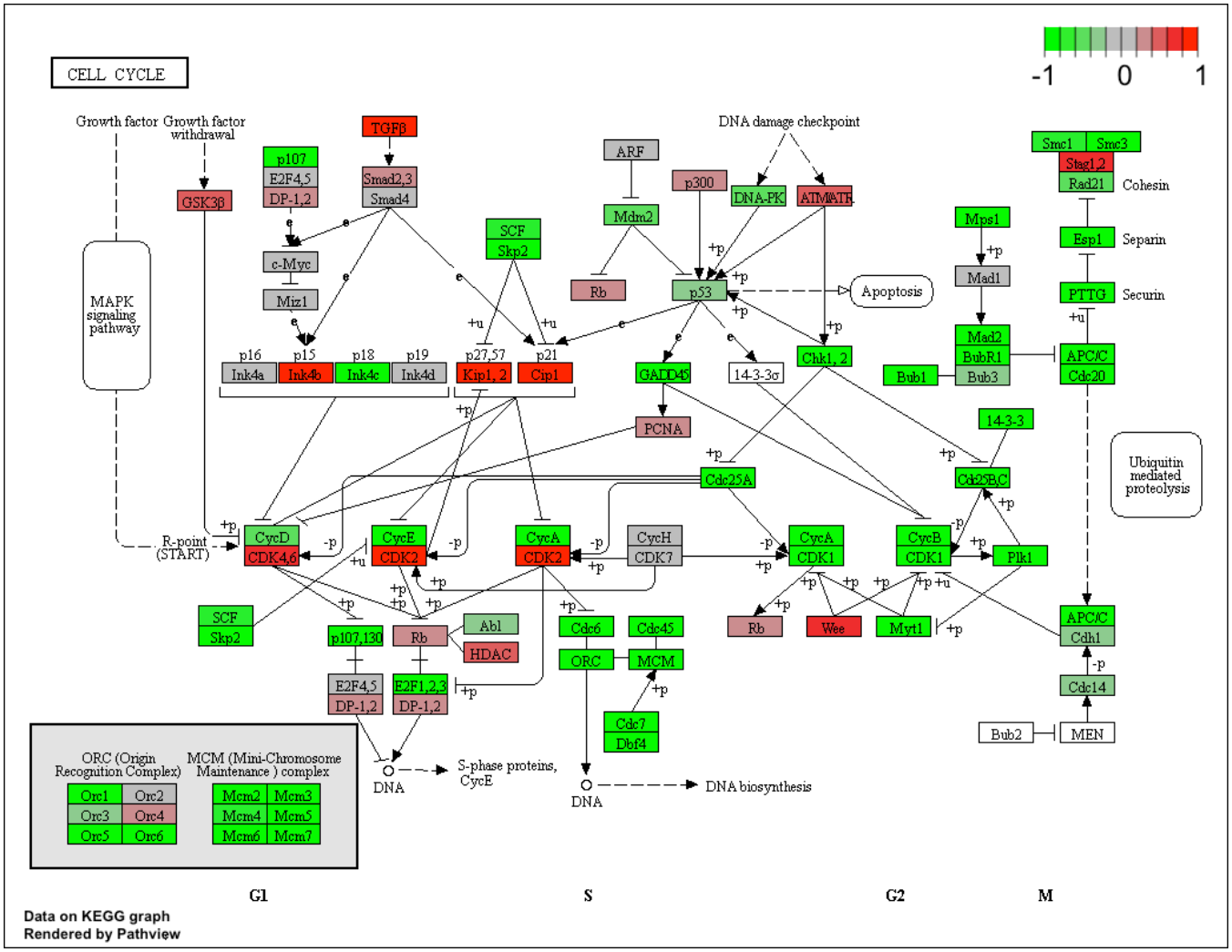

Note how many of the genes in this pathway are perturbed (i.e. colored) in our results.

You can play with the other input arguments to **pathview()** to change the display in various ways including generating a PDF graph. For example:

Hide

```
# A different PDF based output of the same data
pathview(gene.data=foldchanges, pathway.id="hsa04110", kegg.native=FALSE)
```

Now, let's process our results a bit more to automagicaly pull out the top 5 upregulated pathways, then further process that just to get the pathway IDs needed by the **pathview()** function. We'll use these KEGG pathway IDs for pathview plotting below.

Hide

```
## Focus on top 5 upregulated pathways here for demo purposes only
keggrespathways <- rownames(keggres$greater)[1:5]

# Extract the 8 character long IDs part of each string
keggresids = substr(keggrespathways, start=1, stop=8)
keggresids
```

```
## [1] "hsa04640" "hsa04630" "hsa04142" "hsa00140" "hsa04740"
```

Finally, lets pass these IDs in `keggresids` to the **pathview()** function to draw plots for all the top 5 pathways.

Hide

```
pathview(gene.data=foldchanges, pathway.id=keggresids, species="hsa")
```

Here are the plots:

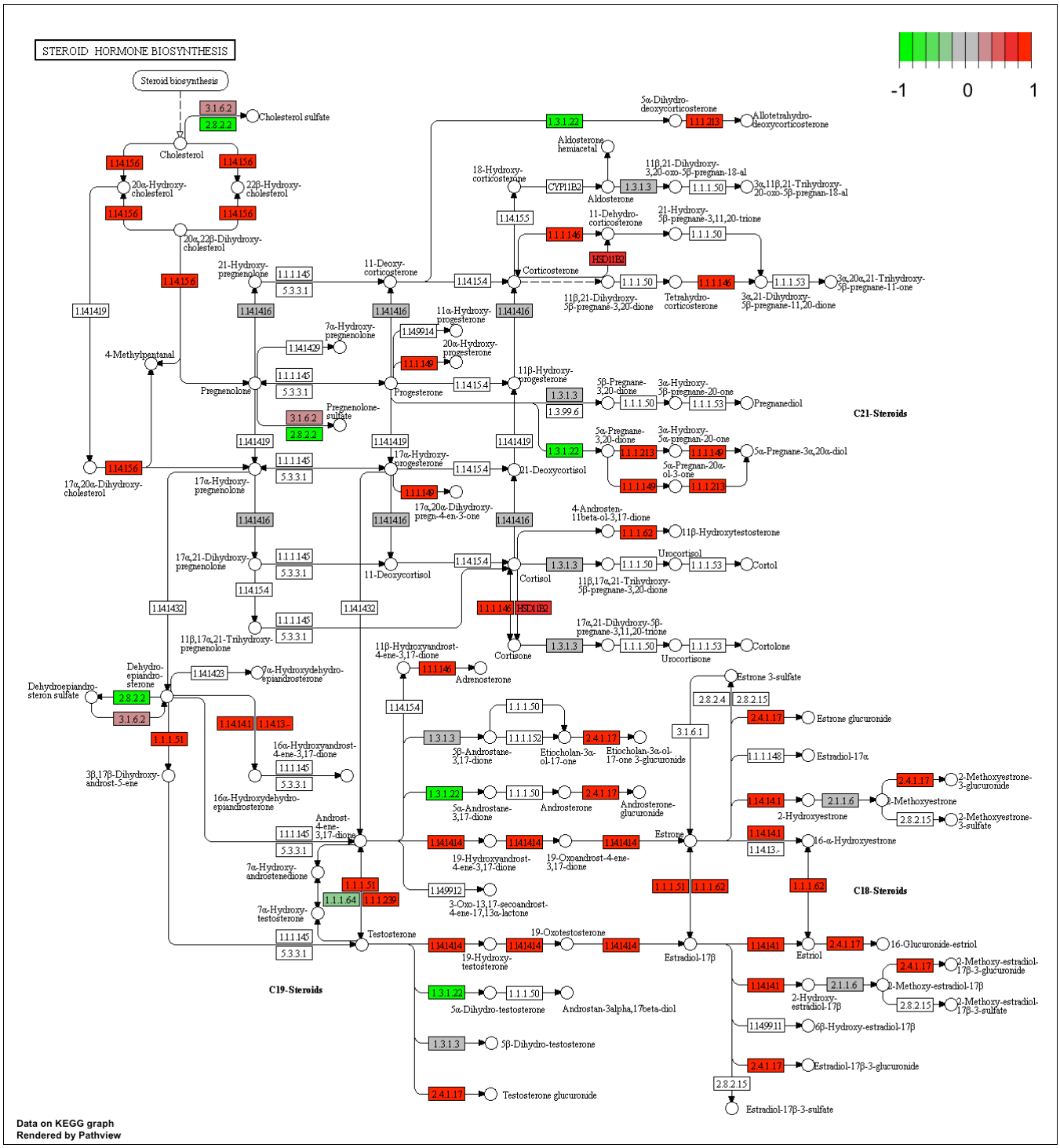
STEROID HORMONE BIOSYNTHESIS
-1
0
1
Steroid biosynthesis
Cholesterol sulfate
Cholesterol
20α-Hydroxy-cholesterol
22β-Hydroxy-cholesterol
20α,22β-Dihydroxy-cholesterol
21-Hydroxy-pregnenolone
11-Deoxy-corticosterone
Corticosterone
5α-Dihydro-deoxycorticosterone
Allotetrahydro-deoxycorticosterone
Aldosterone hemiacetal
18-Hydroxy-corticosterone
Aldosterone
11β,21-Dihydroxy-3,20-oxo-5β-pregnan-18-al
3α,11β,21-Trihydroxy-20-oxo-5β-pregnan-18-al
11-Dehydro-corticosterone
21-Hydroxy-5β-pregnane-3,11,20-trione
11β,21-Dihydroxy-5β-pregnane-3,20-dione
Tetrahydro-corticosterone
3α,21-Dihydroxy-5β-pregnane-11,20-dione
3α,20α,21-Trihydroxy-5β-pregnane-11-one
7α-Hydroxy-pregnenolone
11α-Hydroxy-progesterone
20α-Hydroxy-progesterone
4-Methylpentanal
Pregnenolone
Progesterone
11β-Hydroxy-progesterone
5β-Pregnane-3,20-dione
3α-Hydroxy-5β-pregnane-20-one
Pregnanediol
Pregnenolone-sulfate
C21-Steroids
5α-Pregnane-3,20-dione
3α-Hydroxy-5α-pregnan-20-one
5α-Pregnane-3α,20α-diol
5α-Pregnan-20α-ol-3-one
17α,20α-Dihydroxy-cholesterol
17α-Hydroxy-pregnenolone
17α-Hydroxy-progesterone
21-Deoxycortisol
17α,20α-Dihydroxy-pregn-4-en-3-one
4-Androsten-11beta-ol-3,17-dione
11β-Hydroxytestosterone
17α,21-Dihydroxy-pregnenolone
11-Deoxycortisol
Cortisol
Urocortisol
Cortol
11β,17α,21-Trihydroxy-5β-pregnane-3,20-dione
11β,17α,21-Trihydroxy-pregnenolone
17α,21-Dihydroxy-5β-pregnane-3,11,20-trione
Cortisone
Urocortisone
Cortolone
11β-Hydroxyandrost-4-ene-3,17-dione
Adrenosterone
Dehydro-epiandro-sterone
Dehydroepiandro-steron sulfate
7α-Hydroxydehydro-epiandrosterone
Estrone 3-sulfate
Estrone glucuronide
5β-Androstane-3,17-dione
Etiocholan-3α-ol-17-one
Etiocholan-3α-ol-17-one 3-glucuronide
Estradiol-17α
3β,17β-Dihydroxy-androst-5-ene
16α-Hydroxyandrost-4-ene-3,17-dione
16α-Hydroxydehydro-epiandrosterone
5α-Androstane-3,17-dione
Androsterone
Androsterone-glucuronide
2-Methoxyestrone-3-glucuronide
2-Methoxyestrone
2-Hydroxyestrone
2-Methoxyestrone-3-sulfate
Androst-4-ene-3,17-dione
Estrone
16-α-Hydroxyestrone
19-Hydroxyandrost-4-ene-3,17-dione
19-Oxoandrost-4-ene-3,17-dione
7α-Hydroxy-androstenedione
3-Oxo-13,17-secoandrost-4-ene-17,13α-lactone
C18-Steroids
7α-Hydroxy-testosterone
Testosterone
19-Oxotestosterone
19-Hydroxy-testosterone
Estradiol-17β
Estriol
16-Glucuronide-estriol
2-Methoxy-estradiol-17β-3-glucuronide
2-Methoxy-estradiol-17β
2-Hydroxy-estradiol-17β
2-Methoxy-estradiol-17β-3-sulfate
C19-Steroids
5α-Dihydro-testosterone
Androstan-3alpha,17beta-diol
6β-Hydroxy-estradiol-17β
5β-Dihydro-testosterone
Estradiol-17β-3-glucuronide
Testosterone glucuronide
Estradiol-17β-3-sulfate
Data on KEGG graph
Rendered by Pathview

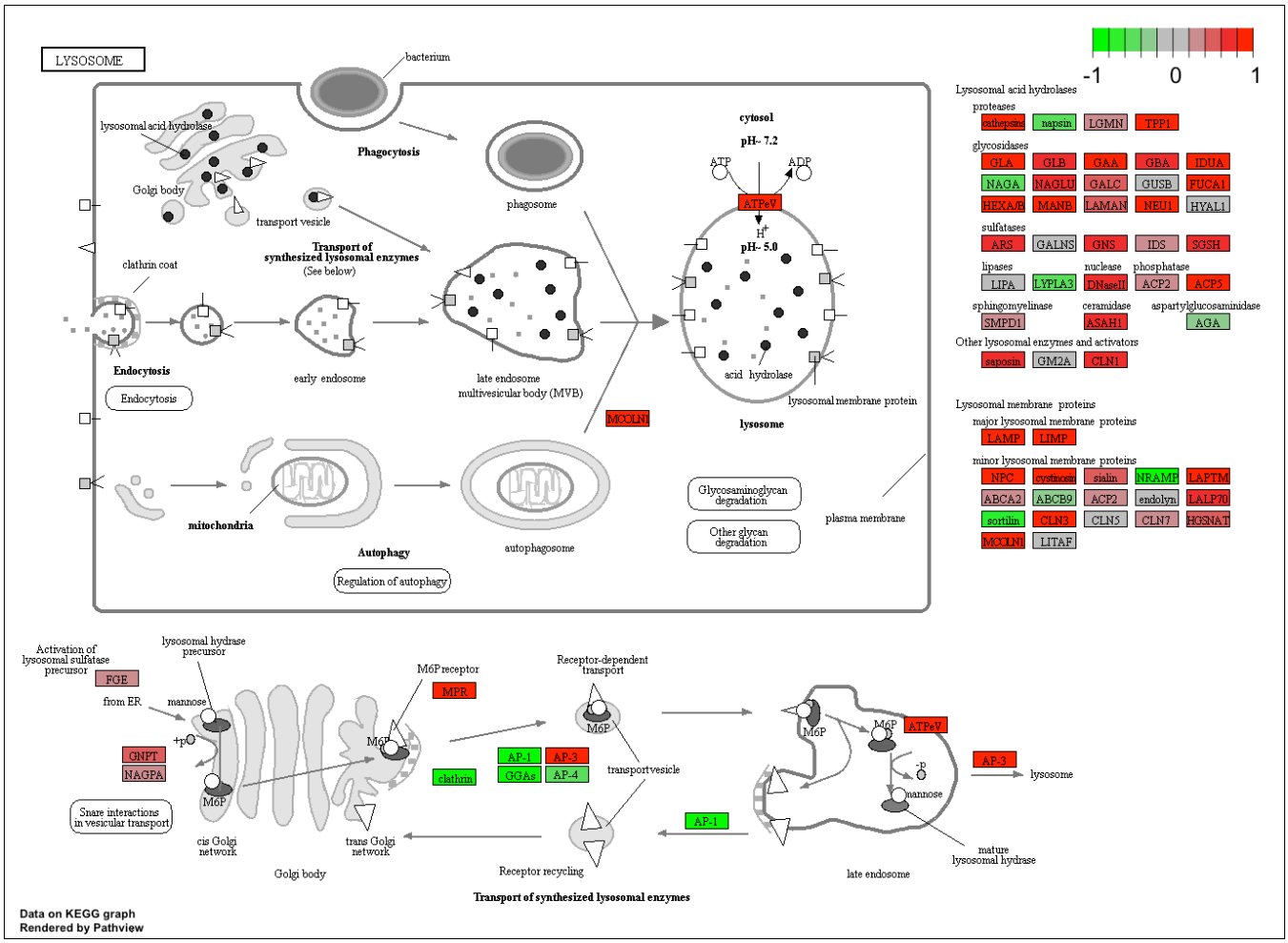
LYSOSOME
bacterium
Phagocytosis
phagosome
lysosomal acid hydrolase
Golgi body
transport vesicle
Transport of synthesized lysosomal enzymes
(See below)
clathrin coat
Endocytosis
Endocytosis
early endosome
late endosome
multivesicular body (MVB)
cytosol
pH~ 7.2
ATP
ADP
ATPeV
H+
pH~ 5.0
acid hydrolase
lysosomal membrane protein
lysosome
MCOLN1
mitochondria
Autophagy
Regulation of autophagy
autophagosome
Glycosaminoglycan degradation
Other glycan degradation
plasma membrane
-1
0
1
Lysosomal acid hydrolases
proteases
cathepsins
napsin
LGMN
TPP1
glycosidases
GLA
GLB
GAA
GBA
IDUA
NAGA
NAGLU
GALC
GUSB
FUCA1
HEXA/B
MANB
LAMAN
NEU1
HYAL1
sulfatases
ARS
GALNS
GNS
IDS
SGSH
lipases
LIPA
LYPLA3
nuclease
DNaseII
phosphatase
ACP2
ACP5
sphingomyelinase
SMPD1
ceramidase
ASAH1
aspartylglucosaminidase
AGA
Other lysosomal enzymes and activators
saposin
GM2A
CLN1
Lysosomal membrane proteins
major lysosomal membrane proteins
LAMP
LIMP
minor lysosomal membrane proteins
NPC
cystinosin
sialin
NRAMP
LAPTM
ABCA2
ABCB9
ACP2
endolyn
LALP70
sortilin
CLN3
CLN5
CLN7
HGSNAT
MCOLN1
LITAF
Activation of lysosomal sulfatase precursor
FGE
lysosomal hydrase precursor
from ER
mannose
+p
GNPT
NAGPA
M6P
Snare interactions in vesicular transport
cis Golgi network
trans Golgi network
Golgi body
M6P receptor
MPR
M6P
clathrin
AP-1
AP-3
GGAs
AP-4
Receptor-dependent transport
transportvesicle
Receptor recycling
AP-1
ATPeV
-p
mannose
AP-3
lysosome
mature lysosomal hydrase
late endosome
Transport of synthesized lysosomal enzymes
Data on KEGG graph
Rendered by Pathview

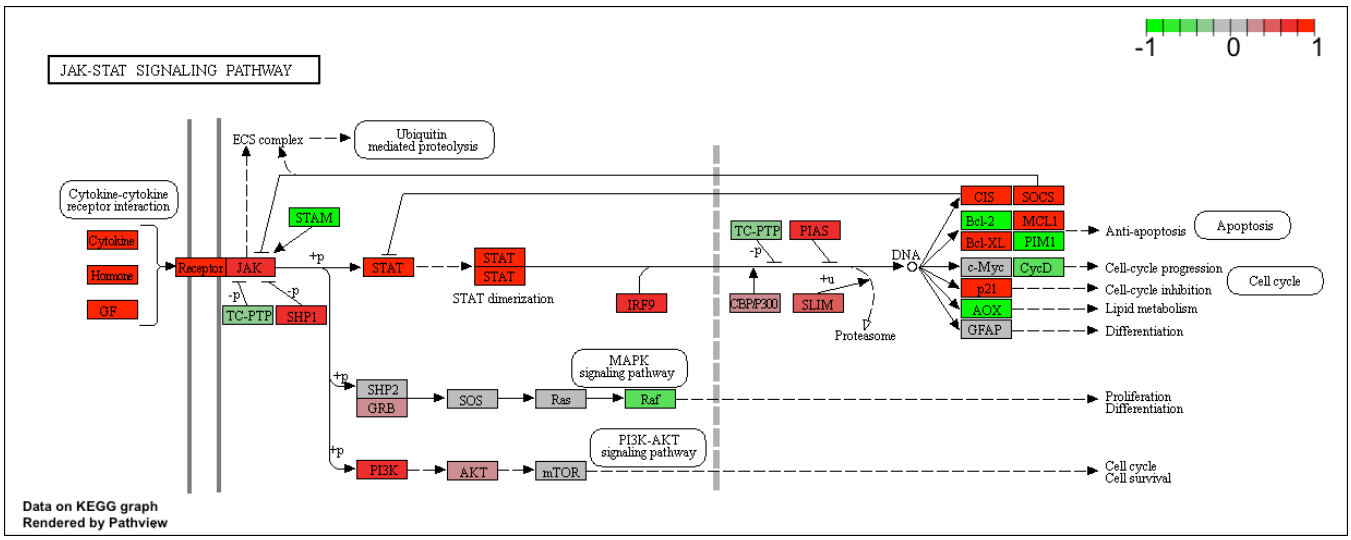
JAK-STAT SIGNALING PATHWAY
-1
0
1
ECS complex
Ubiquitin mediated proteolysis
Cytokine-cytokine receptor interaction
Cytokine
Hormone
GF
STAM
Receptor
JAK
+p
-p
TC-PTP
SHP1
STAT
STAT
STAT
STAT dimerization
IRF9
TC-PTP
PIAS
-p
CBP/P300
SLIM
+u
Proteasome
DNA
CIS
SOCS
Bcl-2
MCL1
Bcl-XL
PIM1
c-Myc
CycD
p21
AOX
GFAP
Anti-apoptosis
Apoptosis
Cell-cycle progression
Cell-cycle inhibition
Cell cycle
Lipid metabolism
Differentiation
MAPK signaling pathway
SHP2
GRB
SOS
Ras
Raf
Proliferation
Differentiation
PI3K-AKT signaling pathway
PI3K
AKT
mTOR
Cell cycle
Cell survival
Data on KEGG graph
Rendered by Pathview

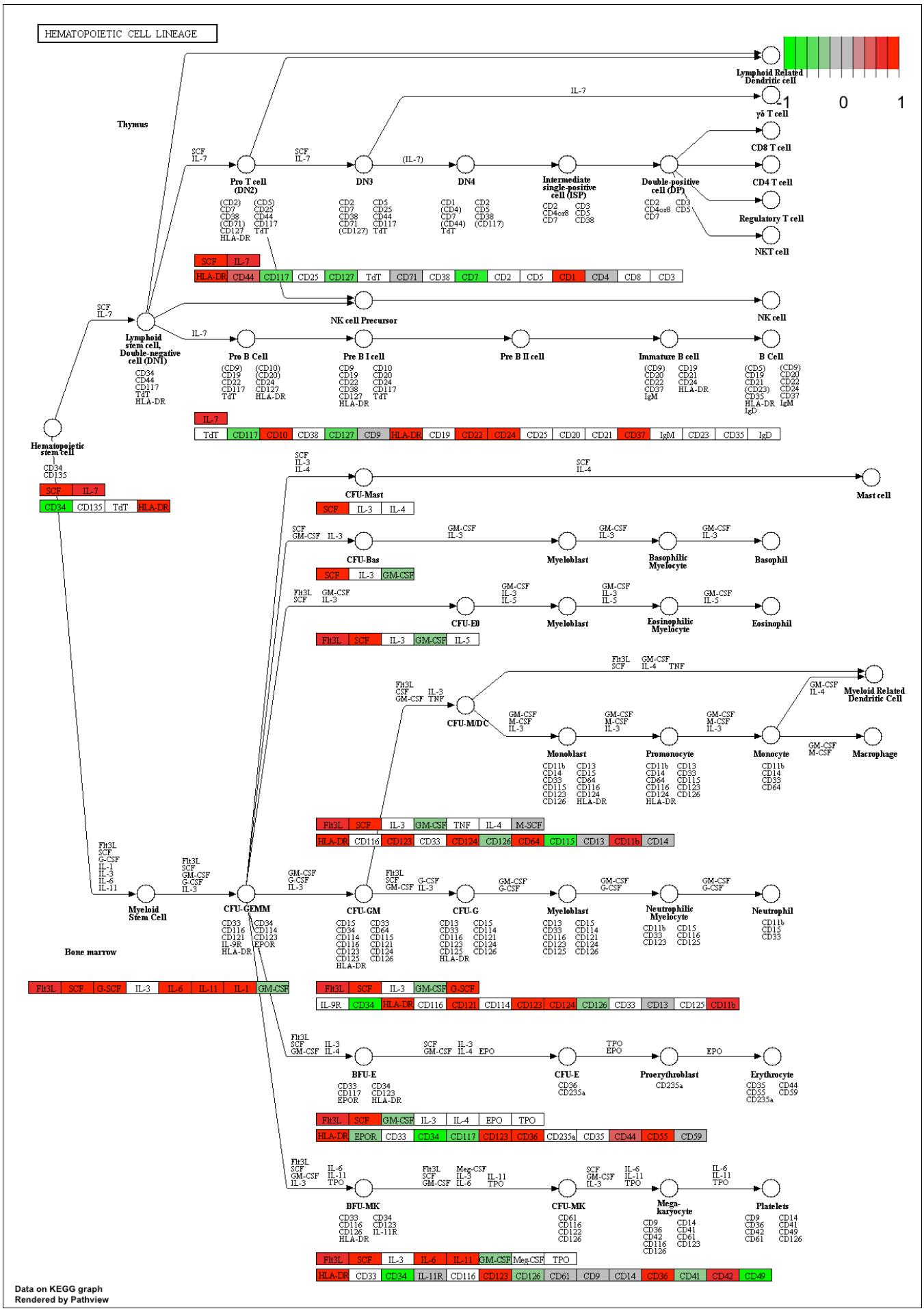
HEMATOPOIETIC CELL LINEAGE
-1
0
1
Lymphoid Related Dendritic cell
γδ T cell
CD8 T cell
CD4 T cell
Regulatory T cell
NKT cell
Thymus
Pro T cell (DN2)
DN3
DN4
Intermediate single-positive cell (ISP)
Double-positive cell (DP)
NK cell Precursor
NK cell
Lymphoid stem cell, Double-negative cell (DN1)
Pro B Cell
Pre B I cell
Pre B II cell
Immature B cell
B Cell
Hematopoietic stem cell
CFU-Mast
Mast cell
CFU-Bas
Myeloblast
Basophilic Myelocyte
Basophil
CFU-E0
Eosinophilic Myelocyte
Eosinophil
CFU-M/DC
Myeloid Related Dendritic Cell
Monoblast
Promonocyte
Monocyte
Macrophage
Myeloid Stem Cell
CFU-GEMM
CFU-GM
CFU-G
Neutrophilic Myelocyte
Neutrophil
Bone marrow
BFU-E
CFU-E
Proerythroblast
Erythrocyte
BFU-MK
CFU-MK
Mega-karyocyte
Platelets
Data on KEGG graph
Rendered by Pathview

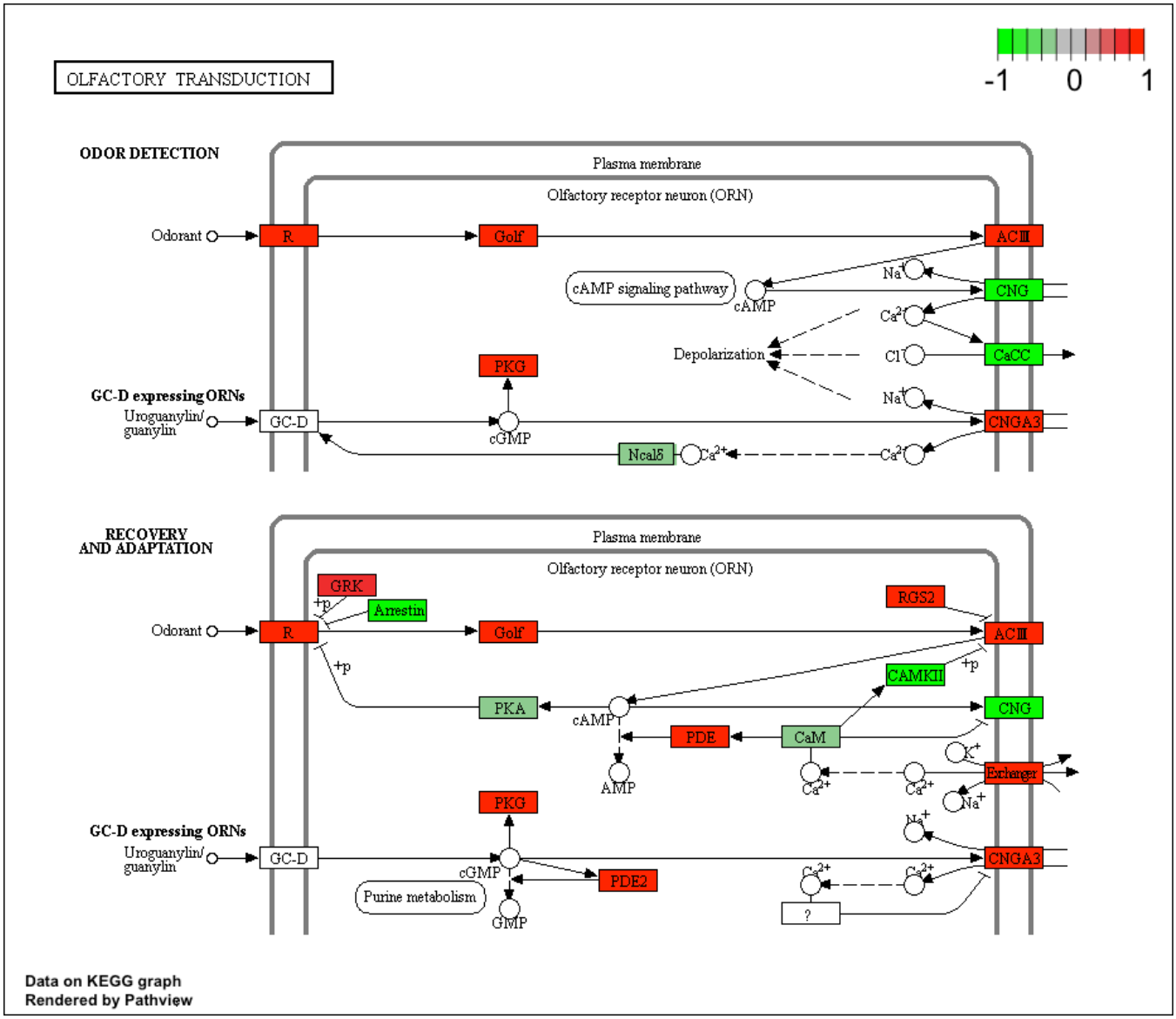

Q. Can you do the same procedure as above to plot the pathview figures for the top 5 down-regulated pathways?

Section 3. Gene Ontology (GO)

We can also do a similar procedure with gene ontology. Similar to above, **go.sets.hs** has all GO terms. **go.subs.hs** is a named list containing indexes for the BP, CC, and MF ontologies. Let's focus on BP (a.k.a Biological Process) here.

Hide

```
data(go.sets.hs)
data(go.subs.hs)

# Focus on Biological Process subset of GO
gobpsets = go.sets.hs[go.subs.hs$BP]

gobpres = gage(foldchanges, gsets=gobpsets)

lapply(gobpres, head)
```

```
## $greater
##                                          p.geomean stat.mean        p.
val
## GO:0007156 homophilic cell adhesion       4.892477e-05  3.971899 4.892477e
-05
## GO:0060429 epithelium development         6.727546e-05  3.834595 6.727546e
-05
## GO:0007610 behavior                       1.735208e-04  3.594057 1.735208e
-04
## GO:0048729 tissue morphogenesis           2.470962e-04  3.498983 2.470962e
-04
## GO:0002009 morphogenesis of an epithelium 3.227439e-04  3.429317 3.227439e
-04
## GO:0016337 cell-cell adhesion             8.195506e-04  3.163057 8.195506e
-04
##                                              q.val set.size         exp1
## GO:0007156 homophilic cell adhesion       0.1337100      107 4.892477e-05
## GO:0060429 epithelium development         0.1337100      478 6.727546e-05
## GO:0007610 behavior                       0.2299150      402 1.735208e-04
## GO:0048729 tissue morphogenesis           0.2455518      403 2.470962e-04
## GO:0002009 morphogenesis of an epithelium 0.2565814      326 3.227439e-04
## GO:0016337 cell-cell adhesion             0.3656453      318 8.195506e-04
##
## $less
##                                            p.geomean stat.mean        p.v
al
## GO:0000279 M phase                       1.475361e-16 -8.323749 1.475361e-
16
## GO:0048285 organelle fission             7.498413e-16 -8.160305 7.498413e-
16
## GO:0000280 nuclear division              2.135098e-15 -8.034814 2.135098e-
15
## GO:0007067 mitosis                       2.135098e-15 -8.034814 2.135098e-
15
## GO:0000087 M phase of mitotic cell cycle 5.927567e-15 -7.891758 5.927567e-
15
## GO:0007059 chromosome segregation        1.055918e-11 -6.988373 1.055918e-
11
##                                                 q.val set.size         exp
1
## GO:0000279 M phase                       5.864560e-13      492 1.475361e-1
6
## GO:0048285 organelle fission             1.490309e-12      373 7.498413e-1
6
## GO:0000280 nuclear division              2.121754e-12      349 2.135098e-1
5
## GO:0007067 mitosis                       2.121754e-12      349 2.135098e-1
5
```

```
## GO:0000087 M phase of mitotic cell cycle 4.712416e-12      359 5.927567e-1
5
## GO:0007059 chromosome segregation        6.995458e-09      141 1.055918e-1
1
##
## $stats
##                                          stat.mean     exp1
## GO:0007156 homophilic cell adhesion       3.971899 3.971899
## GO:0060429 epithelium development         3.834595 3.834595
## GO:0007610 behavior                       3.594057 3.594057
## GO:0048729 tissue morphogenesis           3.498983 3.498983
## GO:0002009 morphogenesis of an epithelium  3.429317 3.429317
## GO:0016337 cell-cell adhesion             3.163057 3.163057
```

Section 4. Reactome Analysis

Reactome is database consisting of biological molecules and their relation to pathways and processes. Reactome, such as many other tools, has an online software available (https://reactome.org/ (https://reactome.org/)) and R package available (https://bioconductor.org/packages/release/bioc/html/ReactomePA.html (https://bioconductor.org/packages/release/bioc/html/ReactomePA.html)).

If you would like more information, the documentation is available here: https://reactome.org/user/guide (https://reactome.org/user/guide)

Let's now conduct over-representation enrichment analysis and pathway-topology analysis with Reactome using the previous list of significant genes generated from our differential expression results above.

First, using R, output the list of significant genes at the 0.05 level as a plain text file:

Hide

```
sig_genes <- res[res$padj <= 0.05 & !is.na(res$padj), "symbol"]
print(paste("Total number of significant genes:", length(sig_genes)))
```

```
## [1] "Total number of significant genes: 8149"
```

Hide

```
write.table(sig_genes, file="significant_genes.txt", row.names=FALSE, col.nam
        es=FALSE, quote=FALSE)
```

Then, to perform pathway analysis online go to the Reactome website (https://reactome.org/PathwayBrowser/#TOOL=AT (https://reactome.org/PathwayBrowser/#TOOL=AT)). Select “choose file” to upload your significant gene list. Then, select the parameters “Project to Humans”, then click “Analyze”.

> **Q**: What pathway has the most significant “Entities p-value”? Do the most significant pathways listed match your previous KEGG results? What factors could cause differences between the two methods?

Section 5. GO online (OPTIONAL)

Gene Set Gene Ontology (GO) Enrichment is a method to determine over-represented or under-represented GO terms for a given set of genes. GO terms are formal structured controlled vocabularies (ontologies) for gene products in terms of their biological function. The goal of this analysis is to determine the biological process the given set of genes are associated with.

To perform Gene Set GO Enrichment online go to the website http://www.geneontology.org/page/go-enrichment-analysis (http://www.geneontology.org/page/go-enrichment-analysis). Paste your significant gene list from section 4. Then, select "biological process" and "homo sapiens", and click submit.

> **Q**: What pathway has the most significant “Entities p-value”? Do the most significant pathways listed match your previous KEGG results? What factors could cause differences between the two methods?

Session Information

The `sessionInfo()` prints version information about R and any attached packages. It's a good practice to always run this command at the end of your R session and record it for the sake of reproducibility in the future.

Hide

```
sessionInfo()
```

```
## R version 4.4.2 (2024-10-31)
## Platform: aarch64-apple-darwin20
## Running under: macOS Sequoia 15.7.3
##
## Matrix products: default
## BLAS:   /Library/Frameworks/R.framework/Versions/4.4-arm64/Resources/lib/l
ibRblas.0.dylib
## LAPACK: /Library/Frameworks/R.framework/Versions/4.4-arm64/Resources/lib/l
ibRlapack.dylib;  LAPACK version 3.12.0
##
## locale:
## [1] en_US.UTF-8/en_US.UTF-8/en_US.UTF-8/C/en_US.UTF-8/en_US.UTF-8
##
## time zone: America/Los_Angeles
## tzcode source: internal
##
## attached base packages:
## [1] stats4    stats     graphics  grDevices utils     datasets  methods
## [8] base
##
## other attached packages:
##  [1] gageData_2.44.0            gage_2.56.0
##  [3] pathview_1.46.0            org.Hs.eg.db_3.20.0
##  [5] AnnotationDbi_1.68.0       ggplot2_4.0.2
##  [7] DESeq2_1.46.0              SummarizedExperiment_1.36.0
##  [9] Biobase_2.66.0             MatrixGenerics_1.18.1
## [11] matrixStats_1.5.0          GenomicRanges_1.58.0
## [13] GenomeInfoDb_1.42.3        IRanges_2.40.1
## [15] S4Vectors_0.44.0           BiocGenerics_0.52.0
## [17] labsheet_0.1.2
##
## loaded via a namespace (and not attached):
##  [1] tidyselect_1.2.1        dplyr_1.2.0             farver_2.1.2
##  [4] blob_1.3.0              Biostrings_2.74.1       S7_0.2.1
##  [7] bitops_1.0-9            fastmap_1.2.0           RCurl_1.98-1.17
## [10] XML_3.99-0.22           digest_0.6.39           lifecycle_1.0.5
## [13] KEGGgraph_1.66.0        KEGGREST_1.46.0         RSQLite_2.4.6
## [16] magrittr_2.0.4          compiler_4.4.2          rlang_1.1.7
## [19] sass_0.4.10             tools_4.4.2             yaml_2.3.12
## [22] knitr_1.51              S4Arrays_1.6.0          labeling_0.4.3
## [25] bit_4.6.0               DelayedArray_0.32.0     RColorBrewer_1.1-3
## [28] abind_1.4-8             BiocParallel_1.40.2     withr_3.0.2
## [31] grid_4.4.2              colorspace_2.1-2        GO.db_3.20.0
## [34] scales_1.4.0            cli_3.6.5               rmarkdown_2.30
## [37] crayon_1.5.3            generics_0.1.4          otel_0.2.0
## [40] rstudioapi_0.18.0       httr_1.4.8              DBI_1.2.3
## [43] cachem_1.1.0            zlibbioc_1.52.0         parallel_4.4.2
## [46] XVector_0.46.0          vctrs_0.7.1             Matrix_1.7-4
```

```
## [49] jsonlite_2.0.0          bit64_4.6.0-1           Rgraphviz_2.50.0
## [52] locfit_1.5-9.12         jquerylib_0.1.4         glue_1.8.0
## [55] codetools_0.2-20        gtable_0.3.6            UCSC.utils_1.2.0
## [58] tibble_3.3.1            pillar_1.11.1           webexercises_1.1.0
## [61] htmltools_0.5.9         graph_1.84.1            GenomeInfoDbData_1.2.
13
## [64] R6_2.6.1                evaluate_1.0.5          lattice_0.22-9
## [67] png_0.1-8               memoise_2.0.1           bslib_0.10.0
## [70] Rcpp_1.1.1              SparseArray_1.6.2       xfun_0.56
## [73] pkgconfig_2.0.3
```